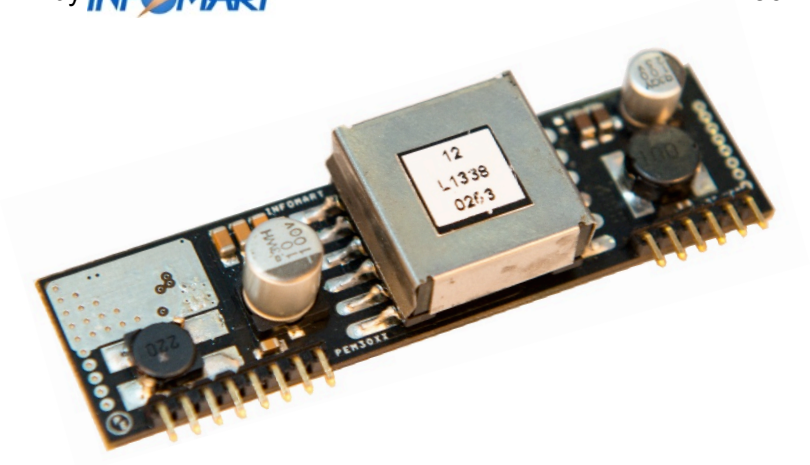

PRODUCT OVERVIEW

The PEM3000 series of Power Over Ethernet Powered Device (PD) power extraction modules, have complete compliance with the high power IEEE 802.3at Power-Over-Ethernet Plus (PoE+) standard, and are designed to extract power from CAT5 Ethernet cable when sourced by both IEEE 802.3at(POE+) and IEEE 802.3af (POE) compliant Power Sourcing Equipments (PSE).

The PEM3000 series modules provide full two event PoE+ and single event POE signature for layer 1 classification and supports layer 2 classification via an “AT Detect” pin..

Its high efficiency DC-DC converter provides up to 30 watts of power in a well regulated, low noise and low ripple output with in-built in-rush current, overload and output short-circuit protection.

The PEM3000 series provides a quick, easy, and cost effective method for manufacturers of Ethernet equipment like PTZ cameras, WiMAX®tower and access points, Wireless N, RFID readers, POS terminals, thin client terminals, and IP telephones to “PoE enable” their equipment.

PRODUCT FEATURES

- Fully IEEE® 802.3at and 802.3af compliant
- Up to 30Watt output load[1]
- IEEE Power class 4
- High efficiency
- Compact package minimum PCB footprint
- Minimal external components required
- Cost effective
- “AT Detect” pin for layer 2 classification
- 1500 Volt DC isolation (Input to Output)
- Overload protection[2]
- Continuous short circuit protection
- Low output ripple and noise
- 12V, 18V and 24V DC output voltage models
- Adjustable output voltage
- Support for external aux. power supply
- RoHS compliant

[1] 30watt peak for maximum 30sec. at duty cycle of 10%. Please see section F.9. – Thermal profile on operating temperature.

[2] If maximum power is exceeded, the PEM3000 will operate in an over current mode and will auto recover when the over load condition is removed.

TABLE OF CONTENTS

PRODUCT OVERVIEW .....
PRODUCT FEATURES 1
PRODUCT SELECTOR 3
ABSOLUTE MAXIMUM RATINGS' 3
INPUT CHARACTERISTICS 3
DC OUTPUT CHARACTERISTICS 3
PIN DESCRIPTION 4
FUNCTIONAL DESCRIPTION 5
PART F.1. – INPUTS 5
PART F.2. – MODES OF OPERATION 5
PART F.3. – POWERED DEVICE (PD) SIGNATURE 6
PART F.4. – IEEE POE POWER CLASSIFICATION METHOD 6
PART F.5. – AT DETECTION (ATD PIN) 7
PART F.7. – ISOLATION 8
PART F.8. – OUTPUT VOLTAGE ADJUSTMENT 8
THERMAL PROFILE 10
PART F.9. – HEAT GENERATION 10
APPLICATION NOTES 12
APPLICATION AREAS 12

TABLE OF FIGURES

Figure 1 – Block Diagram and Typical Connections 4
Figure 2 – Typical System Configuration 5
Figure 3 – POE Power-on start-up waveform 6
Figure 4 – ATD Pin Connection 7
Figure 5 – Remote Shut Down Connection 8
Figure 6 – PEM3012 Output Voltage Adjustment 9
Figure 7 – PEM3018 Output Voltage Adjustment 9
Figure 8 – PEM3024 Output Voltage Adjustment 9
Figure 9 – Thermal Performance profile at nominal V_{in} 10
Figure 10 – Power Plane Heat Sink 11
Figure 11 – Physical Package 11
Figure 12 – Sample PoE System Configuration 12

PRODUCT SELECTOR

Part Number	Marking	Output Voltage[3] (Volts DC)	Efficiency[4] (%)	IEEE Power Classification	Output Power (Maximum)[5] (Watts)
PEM3012	12	12	85	Fixed Class 4	24 watts continuous / 30 watts peak
PEM3018	18	18	85	Fixed Class 4	24 watts continuous / 30 watts peak
PEM3024	24	24	85	Fixed Class 4	24 watts continuous / 30 watts peak

ABSOLUTE MAXIMUM RATINGS[6,7]

Supply Voltage (V_{CC})	0V ~ 57V DC
Storage Temperature (T_S)	-25 ^{O}C ~ +100 ^{O}C
Output Voltage (V_{OUT})	0V to controlled output voltage (operating or non-operating)

INPUT CHARACTERISTICS

Parameter	Symbol	Units	Min.	Typ	Max.
Input Voltage (DC)[8]	V_{IN}	V	36	51	57
Under Voltage Lockout (DC)	V_{UVLO}	V	30		36
Input Current (DC)[9]	I_{IN}	mA	100[8,10]		600
Maximum Inrush Current[10]	I_{PK}	mA			650
Operating Temperature[6]	T_{OP}	^{O}C	-20	25	70
IEEE 802.3at/af Power Classification[11]	Fixed Class 4				

DC OUTPUT CHARACTERISTICS

Parameter	Symbol	Units	Min	Typ	Max.
Line Regulation[9]	V_{LNRG}			0.2%	
Load Regulation[9]	V_{LDRG}			0.5%	
Output Ripple and Noise[4,9]	V_{RIP}	mVp-p		150	
Isolation Voltage (DC)	V_{ISOL}	V			1500
Temperature Coefficient (Slope)	TC	ppm/ ^{O}C		100	300
Output Short Circuit Duration		Sec			∞

[3] Output voltage typical ±3% at T_A for 25°C with a nominal input voltage and rated output current.
[4] At nominal Vin at 67% load.
[5] 30watt peak for maximum 30sec. at duty cycle of 10%. Please see section F.9. – Thermal profile on operating temperature.
[6] All specifications typical are at T_A of 25°C with a nominal input voltage and rated output current unless otherwise noted. These are meant as a design aid only and are indicative, and not guaranteed.
[7] Exceeding the absolute maximum rating may cause permanent damage to the product. We do not imply functional operation under these conditions. This rating assumes free air flow.
[8] Ensure minimum output load of 1 Watt or 100mA input current whichever is higher.
[9] Please refer to IEEE802.3at/af standards document. Maximum input current is dependent on power class, and input voltage. Input current (DC or RMS) at V_{PORT} =37vDC is 600mA, at V_{PORT} =57vDC is 450mA. Peak inrush current is 650mA for 50mS max at duty cycle of 5% max.
[10] Minimum current required to maintain power signature as per IEEE802.3af / at standards.
[11] Please see section F.4. - IEEE POE Power Classification Method, for more details.

Figure 1 – Block Diagram and Typical Connections

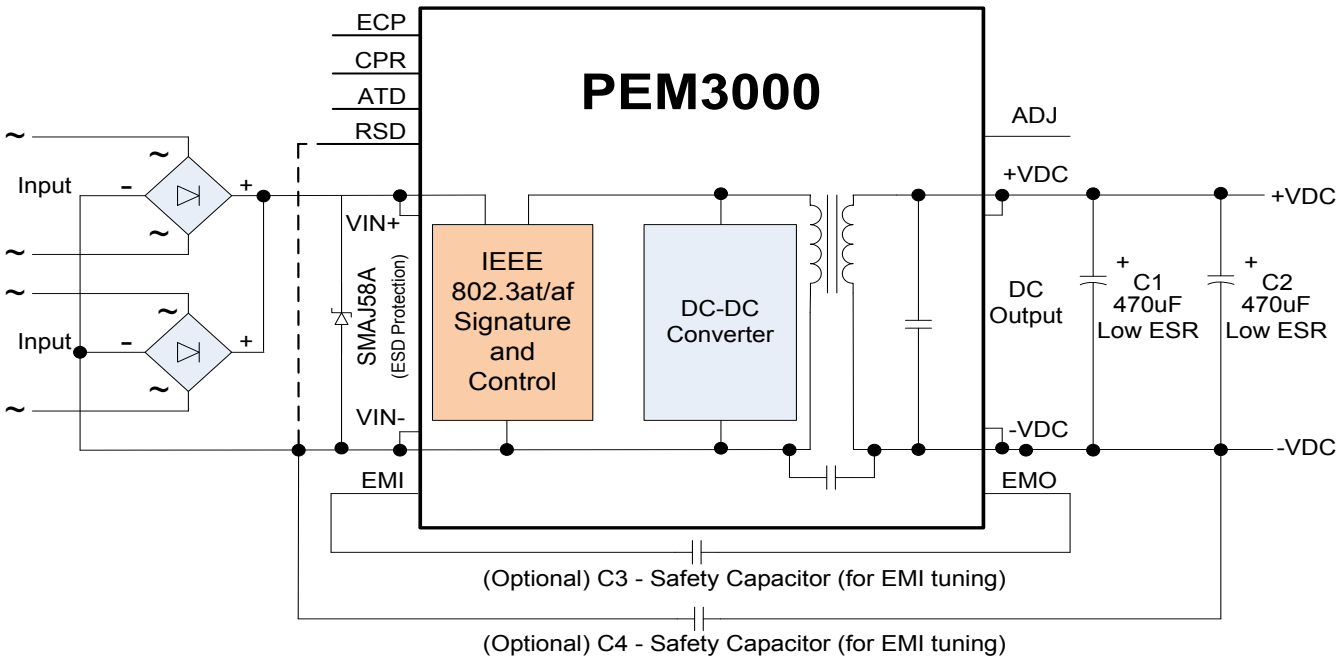

Figure 1

PIN DESCRIPTION

INPUT PINS			OUTPUT PINS	
1	**EMI.** This pin can be used for additional and improved EMI Filtration. Connect this pin **only** to **EMO** pin using safety capacitor.		9	**EMO.** This pin can be used for additional and improved EMI Filtration. Connect this pin **only** to **EMI** pin using safety capacitor.
2	**VIN+**. This pin connects to the positive (+) output of the input bridge rectifiers		10	**+VDC.** This pin provides the regulated output from the DC/DC converter. (Internally connected to pin 11).
3	**VIN-**. This pin connects to the negative (-) output of the input bridge rectifiers (Internally connected to pin 4).		11	**+VDC.** This pin provides the regulated output from the DC/DC converter. (Internally connected to pin 10).
4	**VIN-**. This pin connects to the negative (-) output of the input bridge rectifiers (Internally connected to pin 3).		12	**OADJ.** The output voltage can be adjusted from its nominal value. Please see section F.8.
5	**ATD.** AT Detect Pin. Please see section F. 5.		13	**-VDC**. The ground return for the +VDC output. (Internally connected to pin 14).
6	**RSD.** This pin can be used for remotely shutting down the module from the target device. Please see section F.6.		14	**-VDC**. The ground return for the +VDC output. (Internally connected to pin 13).
7	**ECP.** No Connection.		**To maintain isolation integrity, always connect respective input and output poles only via X or Y safety capacitor. Maintain isolation barrier on motherboard PCB as per physical package.**	
8	**CPR.** Remote Shut down Pin.			

FUNCTIONAL DESCRIPTION

Part F.1. – Inputs

The PEM3000 series is compatible with all IEEE 802.3af / at compliant Power Sourcing Equipment (PSE) and supports the different power injection options of Data/Signal pair (Mode A) or Spare Pair (Mode B). See Figure 2 – Typical System Configuration. (Refer to IEEE802.3at and IEEE802.3af standards for more information).

PEM3000 provides for external input bridge rectifiers for improved system design flexibility, and distribution of heat generation. As an example, a system designer wanting to provide two RJ45 inputs, both of which are PoE enabled, but wants to use only one PEM3000 module to save costs. Another advantage is that this allows the system designer to control the type and costs of the input rectification diodes.

Figure 2 – Typical System Configuration

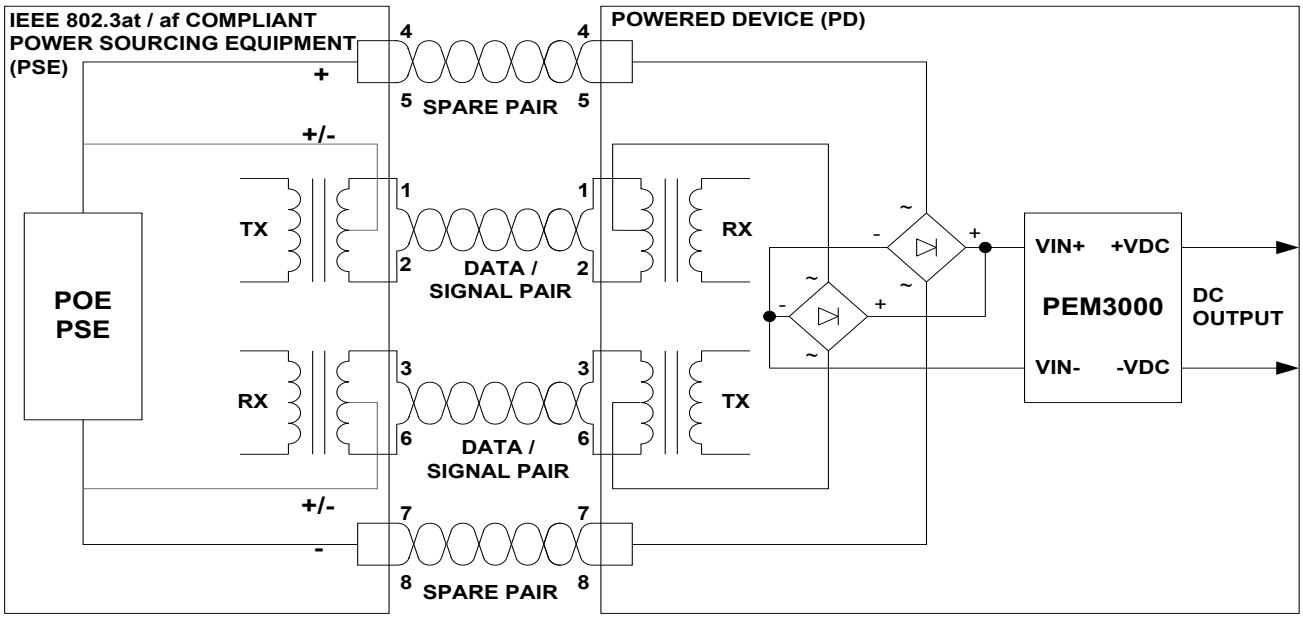

Figure 2

In **Mode A** – Signal Pair injection, the signal lines carry both data and power. In **Mode B** – Spare Pair injection, the Signal pair carries only data, and the spare pair carries power. In **4 pair injection** both Signal and Spare Pairs carries power simultaneously. PEM3000 supports only Mode A and Mode B.

Part F.2. – Modes of Operation

The PEM3000 has five operating modes:

Reset ⇒ Signature Detection ⇒ Classification ⇒ Idle ⇒ On

1. Reset – All PEM3000 blocks are disabled
2. Detection – The PEM3000 presents a valid POE PD response to a detection request from an IEEE compliant PSE.
3. Classification – PEM3000 PD section indicates power requirements to the PSE via a Single-Event Classification for IEEE 802.af or a 2-Event Physical Layer (Layer 1) Classification for IEEE 802.3at.
4. Idle – The PEM3000 enters this state after Classification, and remains until full-power input voltage is applied.
5. On – The PEM3000 PD is enabled, and supplies power to the DC-DC controller and the local application circuitry.

Part F.3. – Powered Device (PD) Signature

When PEM3000 is connected to a Cat 5e or greater Ethernet cable from an IEEE 802.3af /at compliant Power Sourcing Equipment (PSE), Endspan or Midspan, it will automatically present a Powered Device (PD) signature to the PSE, as and when requested. The PSE will then recognise that a PD is connected to that line and supply power.

Figure 3 – POE Power-on start-up waveform

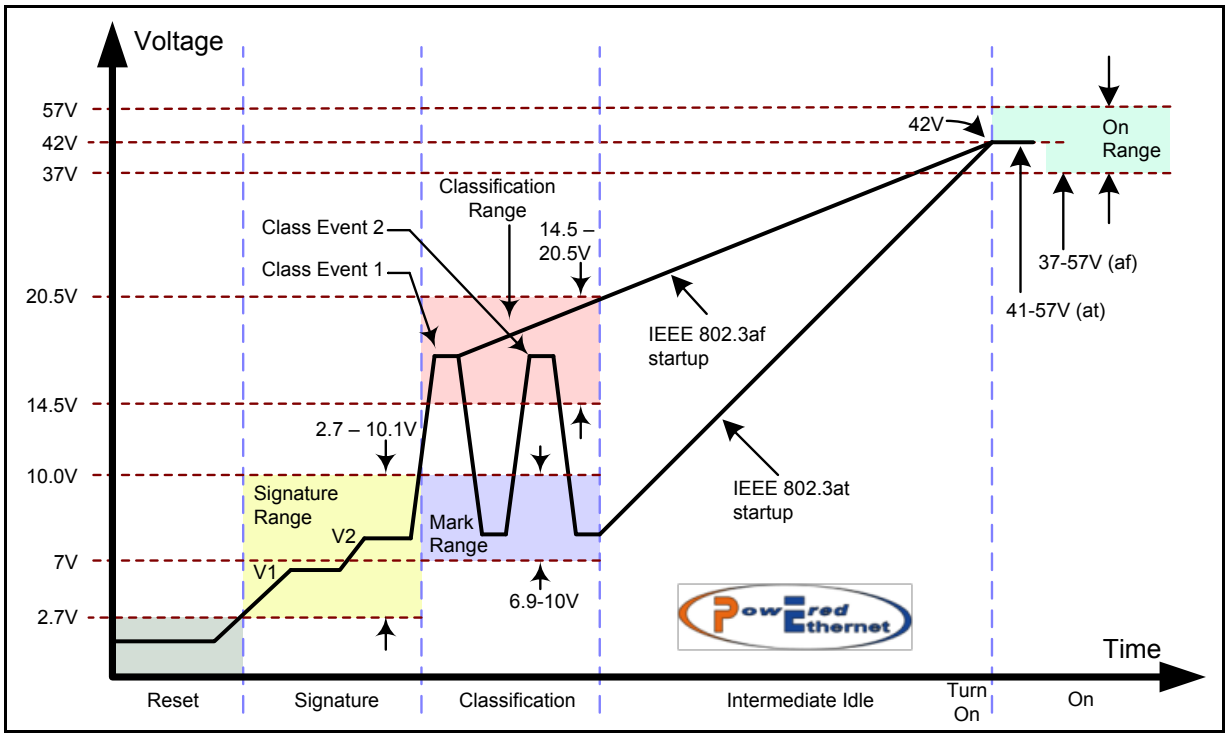

Figure 3

Part F.4. – IEEE POE Power Classification Method

With the growing emphasis on **"Green Power"**, in the latest standard, IEEE has stressed for Powered Devices (PDs) to implement the IEEE **Power Classification** system to ensure correct provisioning of power from the PSE.

To help in proper power level provisioning and improved power management, the IEEE 802.3af and 802.3at standards provide for PDs to inform the PSE their required power levels via a Class system. Each class represents a power allocation range for a PD to inform and therefore assist the PSE in managing power distribution. The power classes are defined as per Table 1 on the next page.

The PEM3000 supports 2-Event Layer 1 (Physical layer) classification, as per IEEE802.3at, as shown in Figure 3, above. For Layer 2 (Link layer) classification please see section F.5 – AT Detection.

The PEM3000 identifies the PSE as either Type 1 (15.4W) or Type 2 (33.6W). If the 2-Event method is detected by the PD controller during the classification stage, it asserts the ATD pin High, indicating connection to a Type 2 PSE. If the PD controller detects only single-event classification, it identifies the PSE to be Type 1 and the ATD pin is asserted Low.

To prevent false positives due to noise or transient ringing on the Ethernet line during the classification phase, the PEM3000 integrates a proprietary digital filter for ensuring reliable AT detection.

Part F.5. – AT Detection (ATD Pin)

In case of Layer 2 (link layer) classification, in order to extract more than 15.4W power from the PSE the host board controller has to confirm back to the PSE through the data link layer (Layer 2) that it is a Type-2 PD. Full details are available in the IEEE 802.3at standards document.

ATD Pin can be connected to host board through an opto-coupler as shown in figure 4.

The opto-coupler (U1) is connected across the isolation barrier. When a Type-2 PSE is connected to the PEM3000, the ATD pin goes High and turns on the opto-coupler. The collector pin of U1 to be connected to the host board controller, using a pull-up resistor. When the ATD pin goes High, U1 output goes Low. Then the host board controller can understand that the PSE can deliver more than 15.4W and confirm back that this is a Type-2 PD.

If the PEM3000 detects a 1 – Event Physical Layer classification, U1 remains OFF and the output collector remains high (via pull-up resistor). The host board then understands that the PSE is not Type-2.

In case the Physical Layer classification is not supported by the PSE, then U1 remains OFF.

Figure 4 – ATD Pin Connection

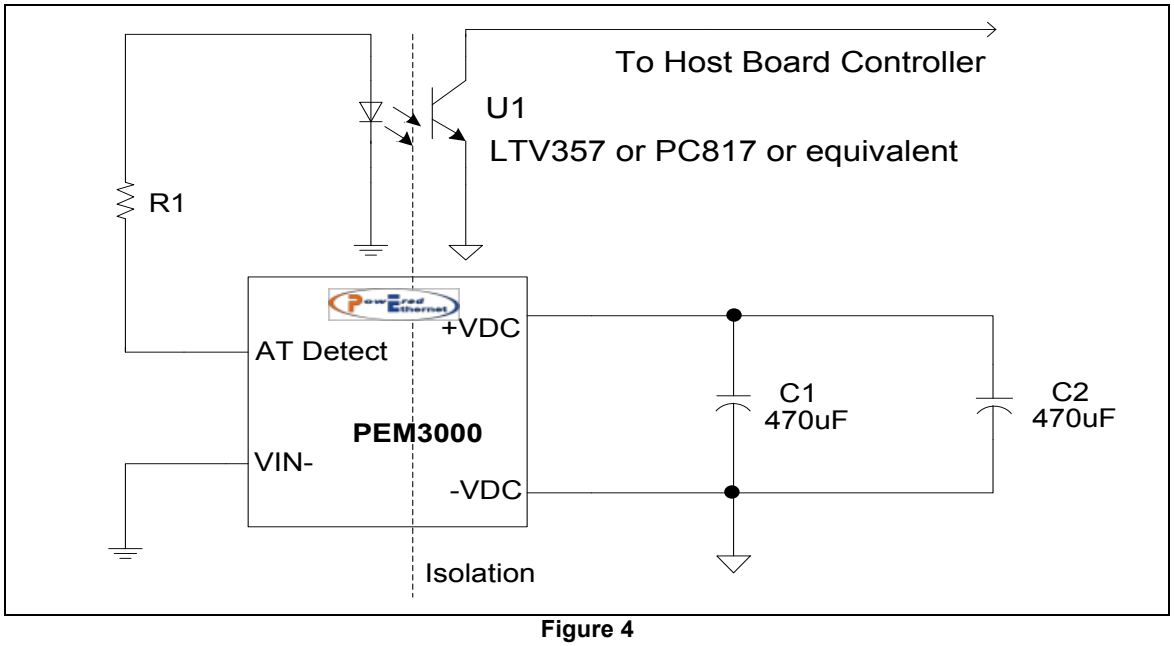

Figure 4

Part F.6. – Remote Shutdown (RSD)

The PEM3000 series is featured with Remote Shut Down option, which can be used in case the host board need to shut down PEM3000. This feature is helpful with host boards having auxiliary power supply.

Using the remote shut down feature the designer can decide the priority of POE power or auxiliary power. For example, when the auxiliary power supply is live, the host board can shut down the PEM3000 output. Similarly the RSD feature can be used to initiate a hardware reset by the host board based on SNMP.

The RSD pin can be connected to host board through an opto-coupler as shown in Figure 5. The opto-coupler is required in order to maintain the 1500V isolation barrier.

To shut down the PEM3000 the host board needs to pull the RSD pin from Zero to High. When the RSD pin is activated, the output of the PEM3000 will switch off. RSD is a current-mode pin, the ratings are as per Table 2 below.
If the remote shut down feature is not used, connect RSD to Vin-.

Table 2: Remote Shut Down				
Description	Unit	Min	Typ	Max
RSD pin threshold low	uA			20
RSD pin threshold high	uA	100		
Input voltage RSD pin	V			6

Figure 5 – Remote Shut Down Connection

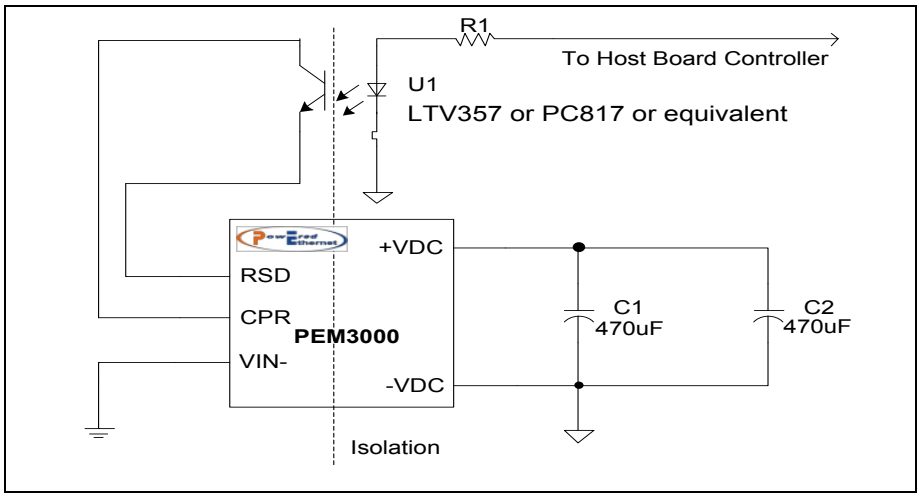

Figure 5

If RSD is asserted, the ATDET pin is forced high, irrespective of the PD mode. Please see Table 3 below for ATDET output definitions under various powering modes.

Table 3: ATDET Truth Table		
ATDET signal status	PSE	
	Type 1	Type 2
RSD = Low	Low	High
RSD = High	High	High

Please contact Infomart technical support for more details.

Part F.7. – Isolation

IEEE 802.3af / at section 33.4.1 calls for a Powered Device (PD) to meet safety isolation requirement by meeting the electrical strength test of IEC 60950 sub clause 6.2. Infomart's® PoweredEthernet™ PEM3000 modules meet or exceed 1500V impulse test. This is also referred to as 'Hi Pot Test', 'Flash Tested', 'Withstand Voltage', 'Proof Voltage', 'Dielectric Withstand Voltage' & 'Isolation Test Voltage'.

Part F.8. – Output Voltage Adjustment

The PEM3000 series has an OADJ pin, which allows the output voltage to be increased or decreased from its nominal value using a 1/16W power rating or greater and 1% tolerance resistor. The resistor to be connected between the OADJ pin and either the +VDC or –VDC pin as per figures 6~8 shown below. ***Only one connection i.e. between OADJ and +VDC or between OADJ and –VDC is permitted at a time***. A change of more than ± 10% or ± 1.5V whichever is lower from nominal voltage is not permitted. **(PEM3024, 24.5V max).** Please contact Infomart technical support for more details or specific resistor values.

Part F.8.1. – PEM3000 Output Voltage Adjustment – Reference Chart

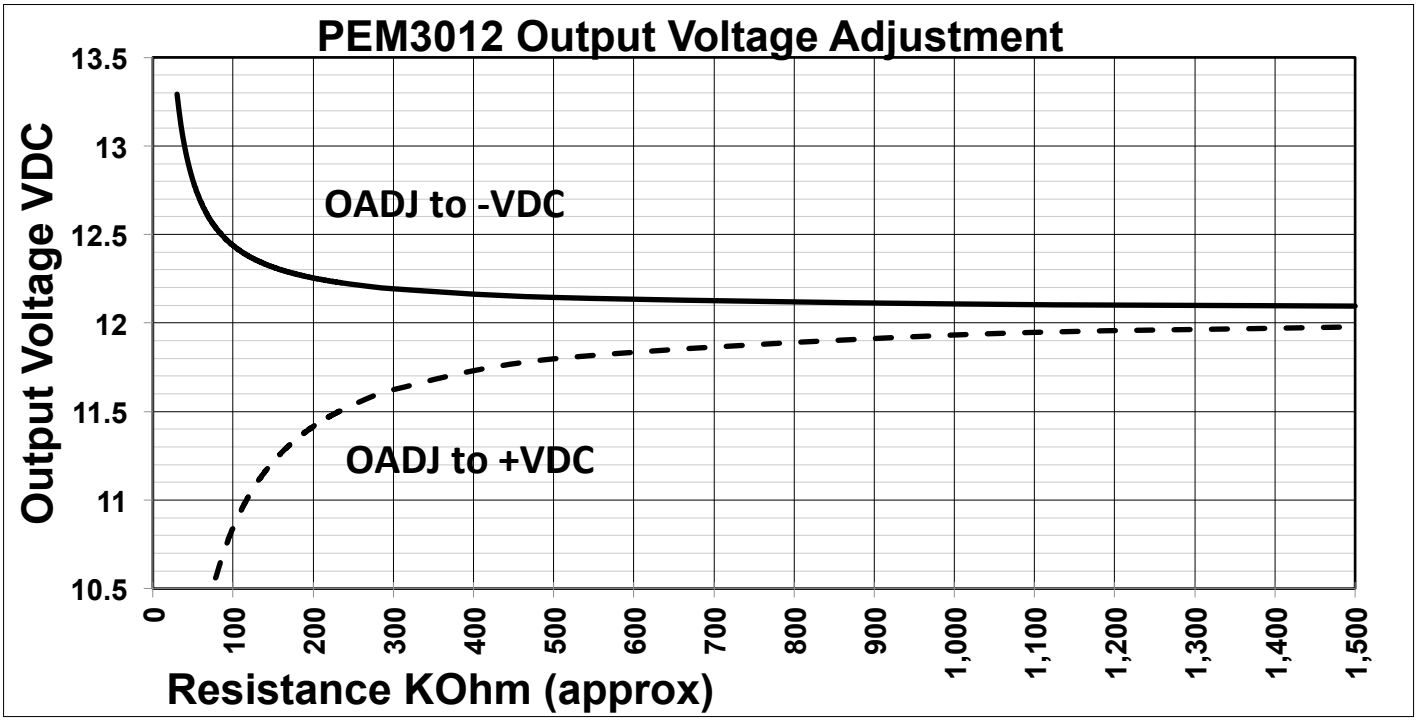

Figure 6

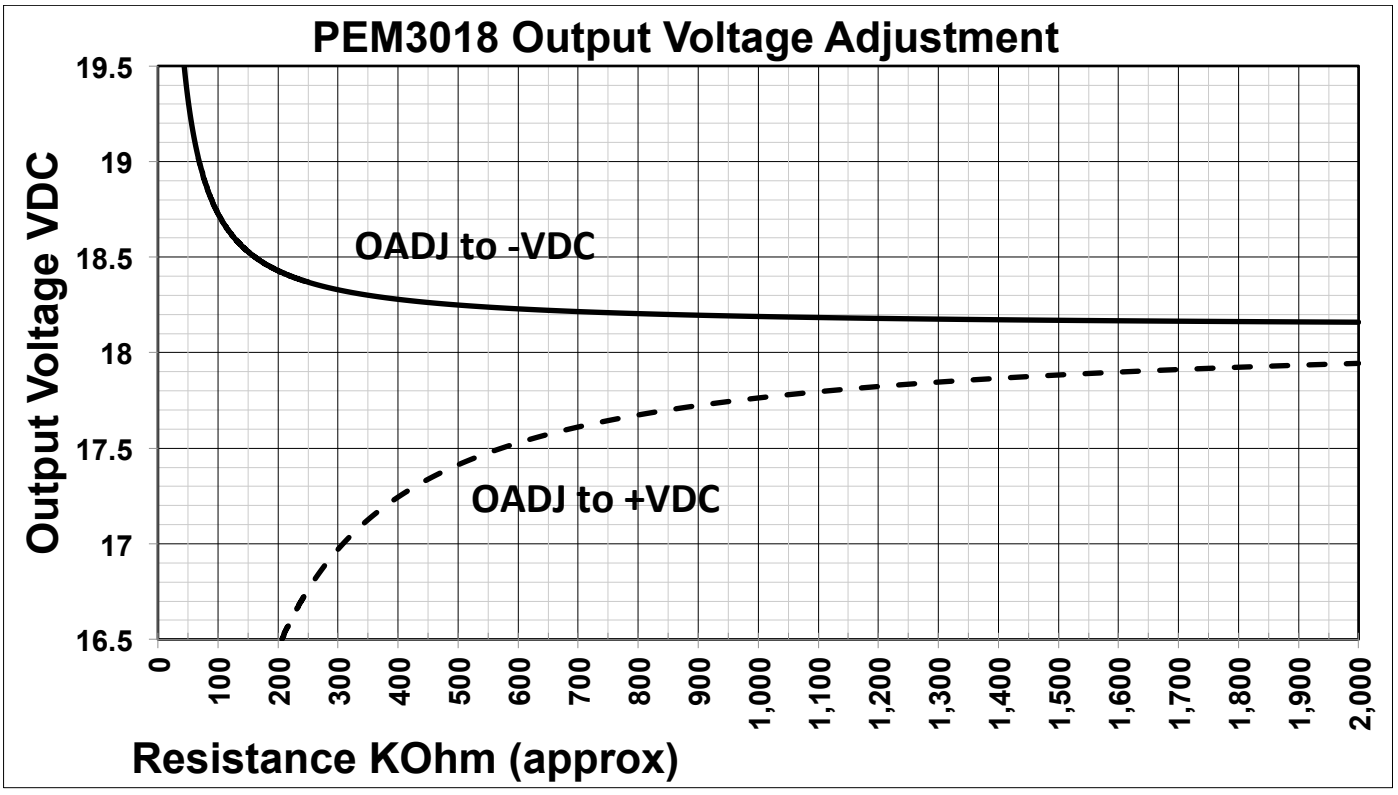

Figure 7

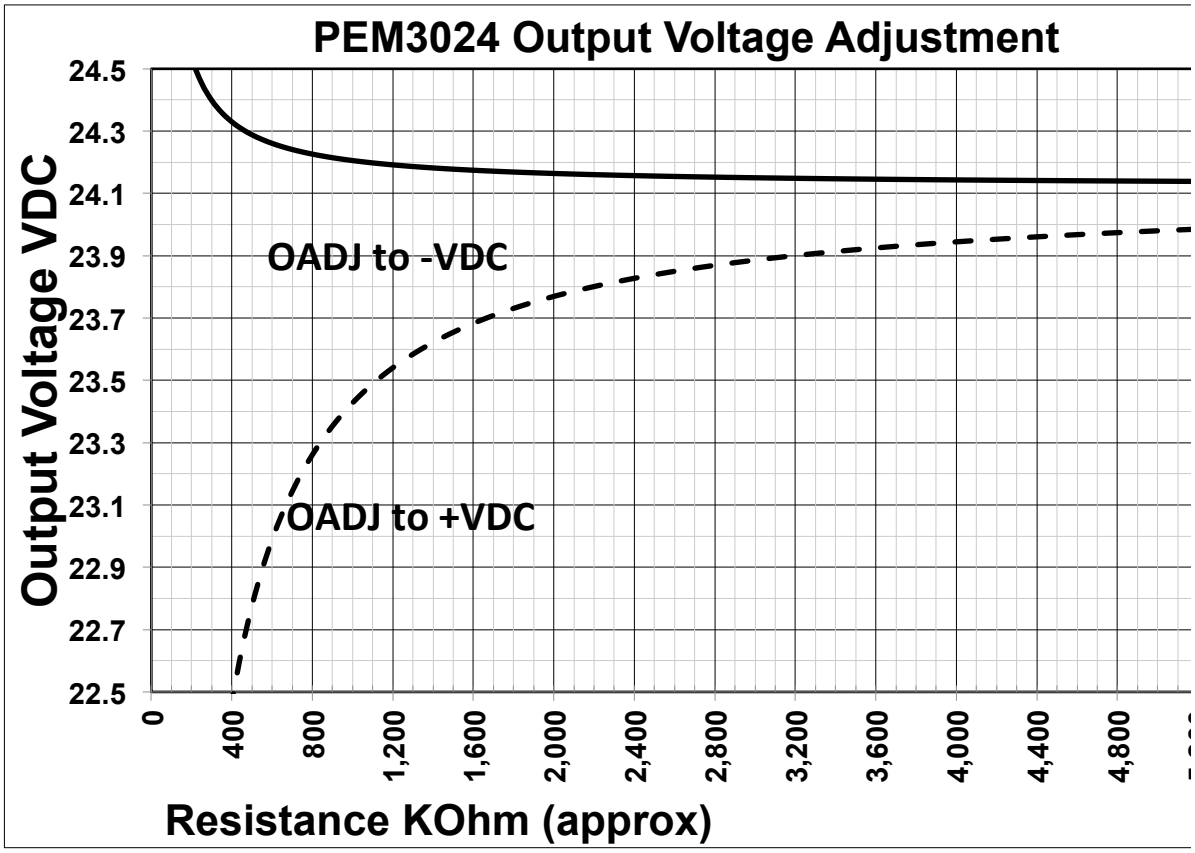

Figure 8

THERMAL PROFILE

Part F.9. – Heat Generation

As with any power component, the PEM3000 modules generate heat. It is important that adequate ventilation and airflow be taken into consideration at the design stage. The quantum of heat generated by the PEM3000 will depend on the output load it is required to drive. The maximum ambient operating temperature is 70°C. *Figure 9* below, shows the thermal performance of the PEM3000 with a nominal 51VDC input.

Figure 9 – Thermal Performance profile at nominal V_{in}

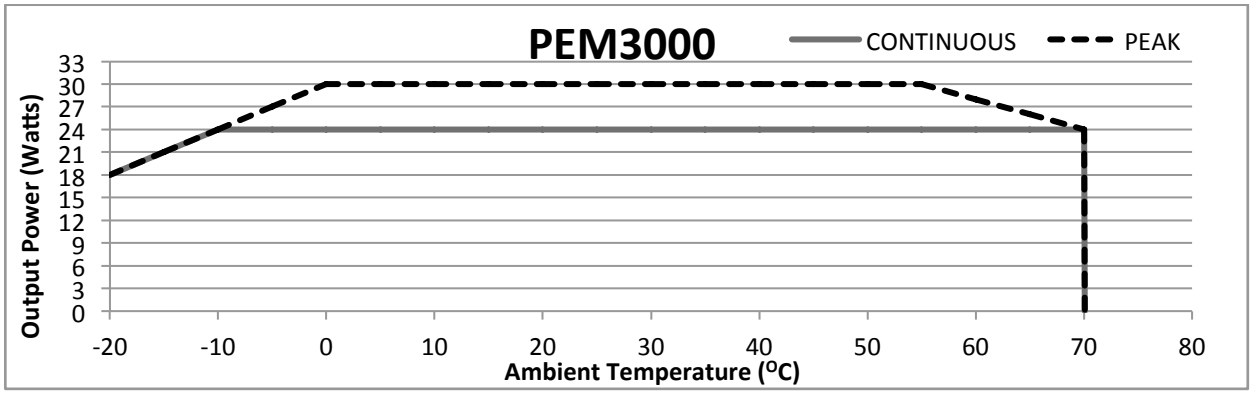

Figure 9

Figure 10 – Power Plane Heat Sink

The PEM3000 thermal performance can be improved by forced airflow cooling over the module and by using (a) a heat sink glued on to the diodes using thermal glue or (b) a power plane heat sink described in *Figure 10* below. The two methods can be combined.

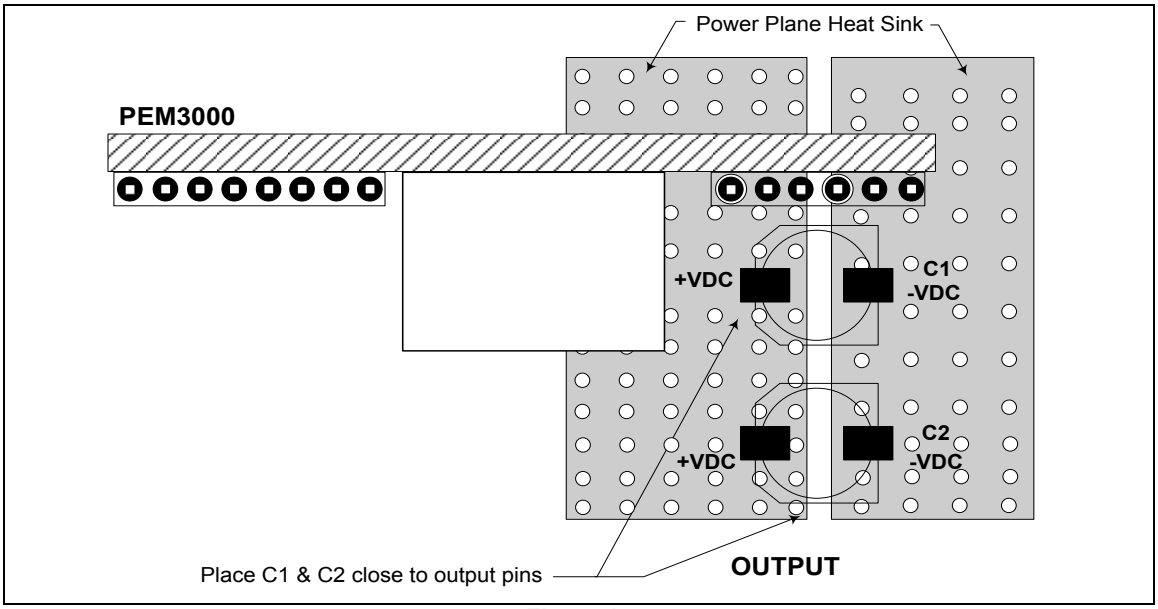

Figure 10

A power plane heat sink on the motherboard is a relatively simple method to draw some heat away from the PEM3000 using the output pins (-VDC and +VDC) which are connected to a PCB heat sink on the motherboard. **It is important to maintain electrical isolation mutually between the OADJ pin, the EMO pin, the +VDC pin, and the -VDC pin in order to ensure proper output voltages.**

These power plane heat sinks must be on the outer layers of the PCB. For better heat dissipation always solder the PEM3000 on the power plane; don't use sockets. Sockets can also generate voltage spikes.

These methods can be combined with forced airflow cooling and for extreme cases with an additional heat sink glued on to the main transformer using thermal glue.

Figure 11 – Physical Package

All dimensions in mm and nominal unless stated otherwise

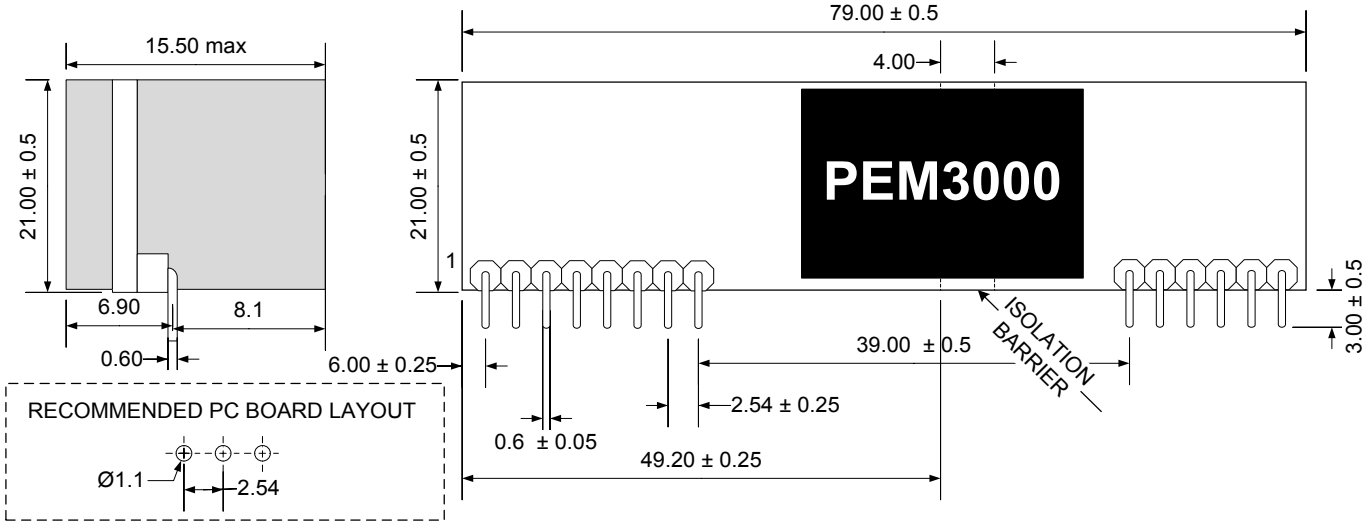

Figure 11

APPLICATION NOTES

Power Over Ethernet (PoE) is a technology for wired Ethernet, the most widely installed local area network technology in use today. PoE allows the electrical power necessary for the operation of each end-device to be carried by data cables along with the data, rather than by separate power cords. Thus, it minimizes the number of wires used to install the network, resulting in lower cost, less downtime, easier maintenance and greater installation flexibility.

The IEEE standard governing PoE is IEEE802.3at and IEEE802.3af. Compliance with this standard ensures inter-operability between devices.

The PEM3000 series modules offering a modular solution, incorporating Layer-1 IEEE802.3at / af compatibility signature to the PSE and isolated on-board DC/DC converter. The PEM3000 series are ideal modular system blocks allowing manufacturers of Ethernet equipment to “PoE enable” their equipment with minimal effort and cost. The PEM3000 modules series offer simple and quicker product development, maximising return on investment.
PEM3000 can be powered using a user designed power supply which has adequate thermal and over-current protection. It is strongly recommended that only IEEE802.3at / af compliant power supply equipment be used to prevent damage to the module, which lacks output stage thermal protection.

ESD Protection: It is required that the system designer must provide ESD protection such as an SMAJ58A (uni-directional) or SMAJ58CA (bi-directional) TVS diode at the PEM3000 input(s) to prevent damage from over-voltage surges and for system EMC compliance.

APPLICATION AREAS

- Security and alarm systems
- Voice over IP phones
- Access control systems
- IP Cameras
- Displays, Net Monitors
- Public address systems
- Wireless access points
- Environmental control
- Telemetry
- Remote environmental monitoring

Figure 12 – Sample PoE System Configuration

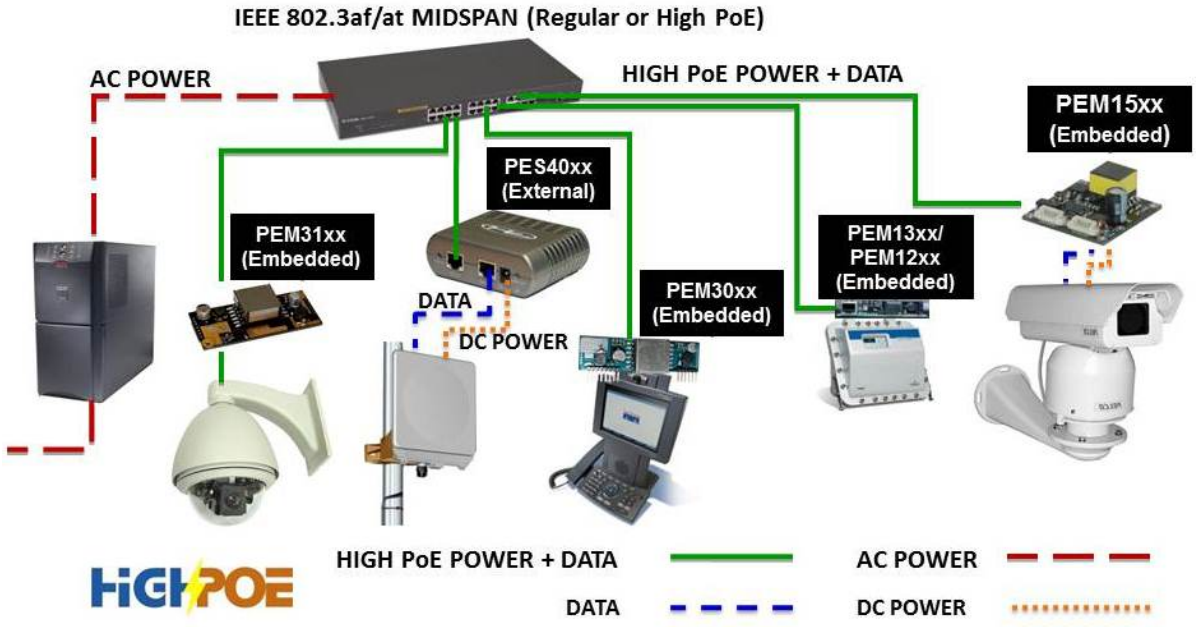

Figure 12

Infomart India Pvt. Ltd.
Infomart Tech Park
99, 5th Cross, 5th Block, Koramangala
Bangalore – 560 095, Karnataka
India
Tel : +91 80 4111-7200
Email: pesales@infomartgroup.com

Infomart Technologies
Americas sales office
5904, South Cooper St. #104-96
Arlington, Texas, 76017, USA
Tel : +1 (682) 234-4600

Infomart® reserves the right to alter or improve the specification, internal design or manufacturing process at any time, without notice. Please check with your distributor or visit our website to ensure that you have the current and complete specification for your product before use.© Infomart India Pvt. Ltd. All rights reserved. This publication, in full or in part, may not be copied, transmitted or stored in a retrieval system, or reproduced in any way including, but not limited to, magnetic, digital, photographic, photocopy, magnetic or other recording means, without prior written permission from Infomart India Pvt. Ltd. Infomart is a registered trademark of Infomart® (India) Pvt. Ltd. PoweredEthernet™ is a trademark of Infomart (India) Pvt. Ltd.